THIS DRAWING IS UNPUBLISHED | RELEASED FOR PUBLICATION 2020
© COPYRIGHT 2020 BY TE CONNECTIVITY | ALL RIGHTS RESERVED.

LOC	DIST

REVISIONS

P	LTR	DESCRIPTION	DATE	DWN	APVD
	J	REVISED PER ECO-15-007761	28MAY2015	RL	DM
	K	REVISED PER PCN E-20-008101	12JUN2020	DM	DM

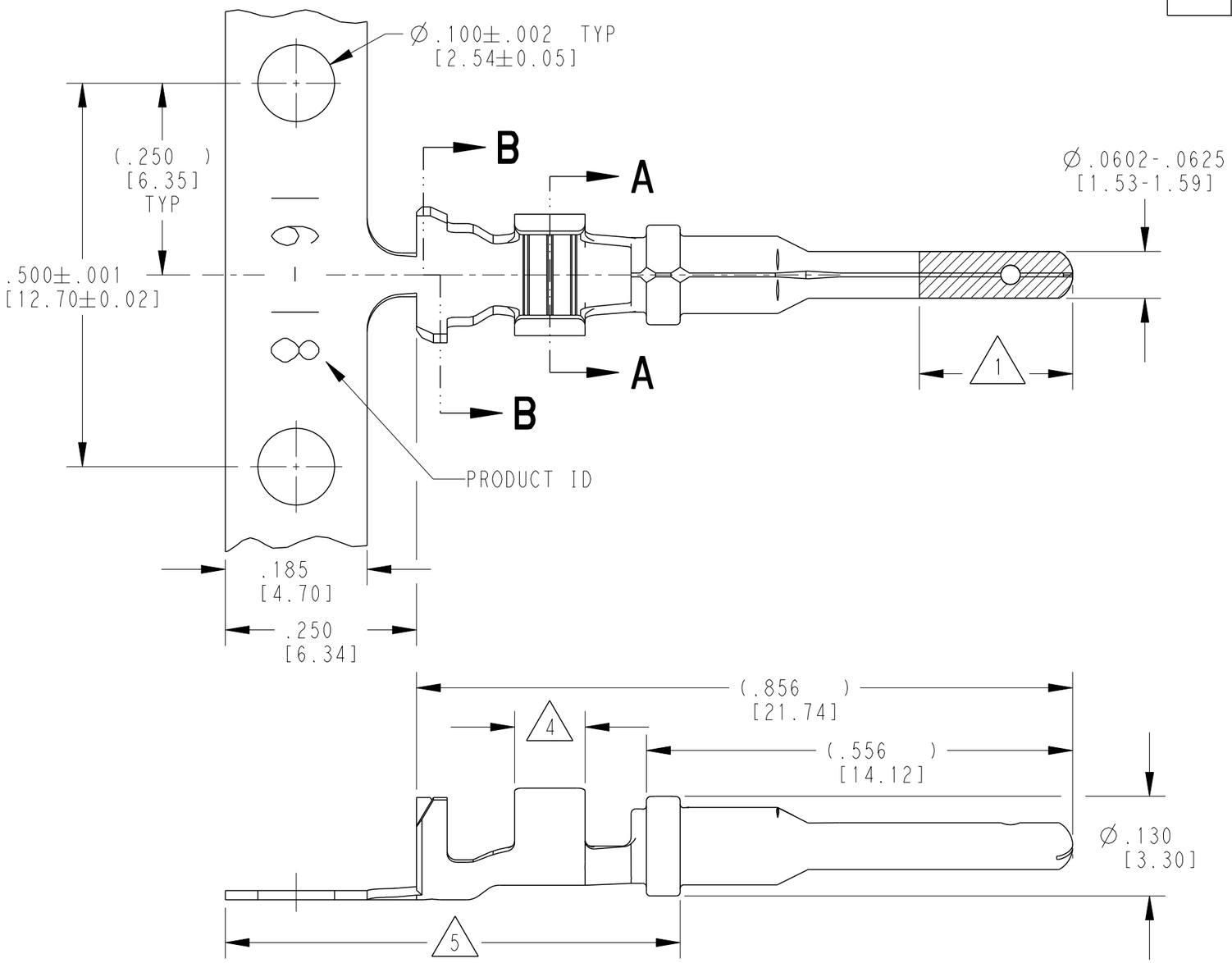

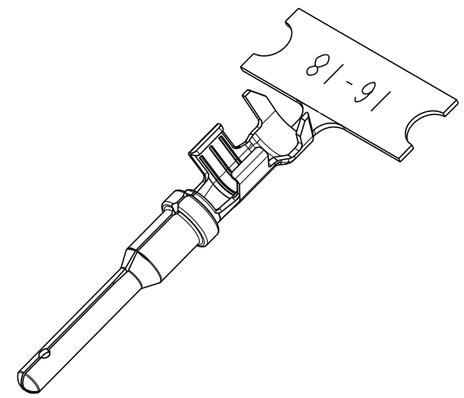

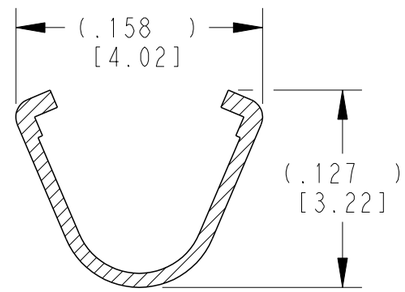

SECTION A-A
WIRE BARREL

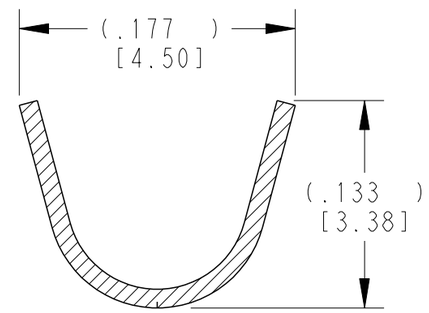

SECTION B-B
INSULATION BARREL

TE INTERNAL PN	DEUTSCH PN	PLATING
1060-16-0122	1060-16-0122	Ni/Cu overall, Sn/Ni/Cu Wire Barrel
1060-16-0144	1060-16-0144	Selective Au, Ni/Cu overall, Sn/Ni/Cu Wire Barrel
1060-16-0177	1060-16-0177	Sn/Ni/Cu overall

5 TIN PLATING MAY BE IN THIS REGION.

4 TIN PLATED REGION.

3 MATERIAL: .012 [0.30] THICK COPPER ALLOY

2. WIRE RANGE: 18 AWG TO 14 AWG [0.75-2.0 mm²]
INSULATION RANGE: Ø.075-.140 [Ø1.91-3.56]

1 GOLD PLATED REGION.

NOTES: UNLESS OTHERWISE SPECIFIED

THIS DRAWING IS A CONTROLLED DOCUMENT.

DIMENSIONS: INCHES[mm]

TOLERANCES UNLESS OTHERWISE SPECIFIED:
0 PLC ±
1 PLC ±
2 PLC ±
3 PLC ±.025 [0.64]
4 PLC ±
ANGLES ±

MATERIAL 3

FINISH SEE TABLE

DWN M. BLUM 04NOV1999
CHK A. ROLINSKI 08DEC2000
APVD R. REED 08DEC2000
PRODUCT SPEC 108-151000
APPLICATION SPEC 114-151000
WEIGHT 0.33 g

TE Connectivity

NAME STAMPED CONTACT PIN SIZE 16

SIZE	CAGE CODE	DRAWING NO	RESTRICTED TO
A3	4AFU8	C-1060-16-01XX	-

Customer Drawing | SCALE 6:1 | SHEET 1 OF 1 | REV K