THIS DRAWING IS UNPUBLISHED. RELEASED FOR PUBLICATION 2012
© COPYRIGHT 2012 BY TE CONNECTIVITY ALL RIGHTS RESERVED.

REVISIONS

P	LTR	DESCRIPTION	DATE	DWN	APVD
	D8	ECO-18-013654	28AUG2018	DS	DS
	E	ECO-18-014102	05SEP2018	DS	DS
	E1	ECO-18-019700	17DEC2018	DS	DS
	E2	ECO-19-014688	21NOV2019	DS	DS

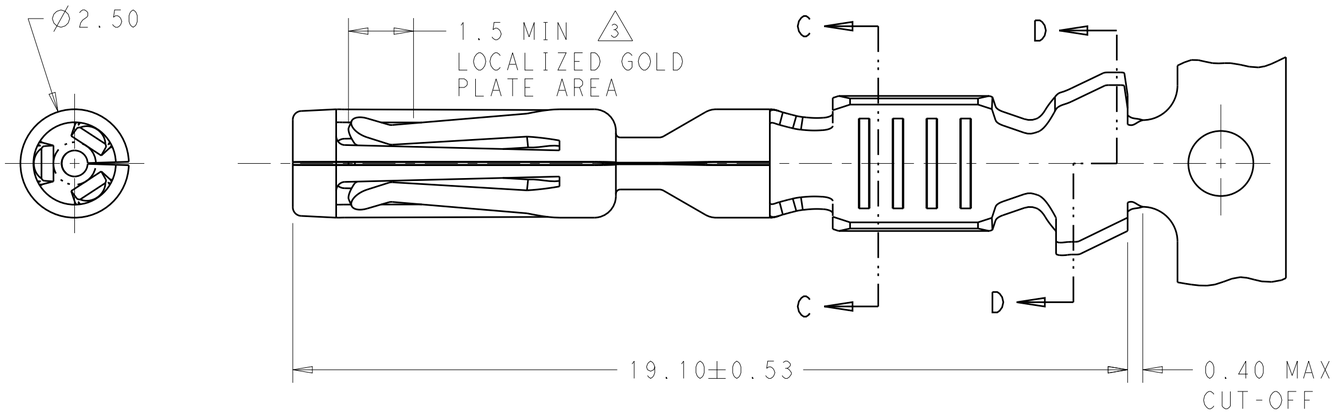

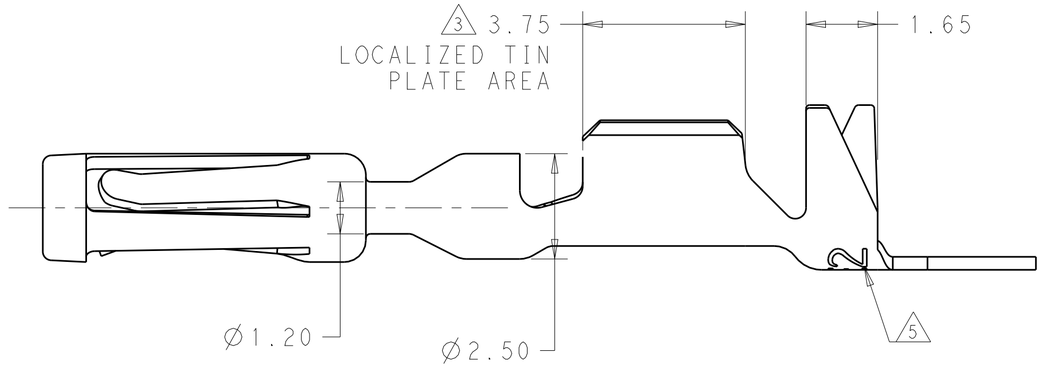

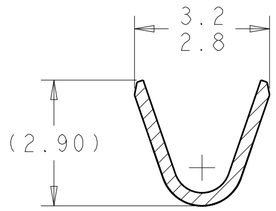

SECTION C-C
ROTATED 90° CW

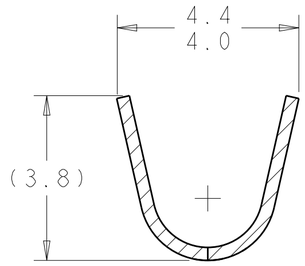

SECTION D-D
ROTATED 90° CW

1. THE WIRE SIZES QUALIFIED FOR THIS TERMINAL ARE LISTED BELOW SHOWING THE AWG SIZE AND THE METRIC EQUIVALENT

   20AWG - 0.5mm^2

   18AWG - 0.8mm^2

   16AWG - 1.0mm^2

   THE TERMINAL HAS ALSO BEEN QUALIFIED TO THE SPECIFIC METRIC WIRE SIZES LISTED BELOW

   1.0mm^{2}FLRY

   1.5mm^{2}FLRY

2. INSULATION RANGE: 1.70-2.70.

3. .00075 MIN GOLD IN THE LOCALIZED GOLD PLATE AREA, .0025 MIN MATTE TIN IN THE LOCALIZED TIN PLATE AREA OVER .00125 MIN NICKEL OVER ENTIRE CONTACT.

4. USED WITH AMPSEAL PLUG ASSEMBLY: 776286, 776273, 770680, 776164

5. DIE IDENTIFIER, T275 AND TE2, LOCATED IN THIS AREA.

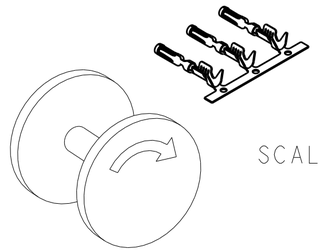

SCALE 1:1

FIGURE 1
FINAL PAYOUT DIRECTION

LOOSE PIECE	FINISH	MATERIAL	PART NUMBER
770854-3	GOLD 3	0.30 COPPER ALLOY	770520-3
770854-1	PRE-TIN	0.30 COPPER ALLOY	770520-1

THIS DRAWING IS A CONTROLLED DOCUMENT.

DIMENSIONS: mm

TOLERANCES UNLESS OTHERWISE SPECIFIED:
0 PLC ±-
1 PLC ±-
2 PLC ±0.15
3 PLC ±-
4 PLC ±-
ANGLES ±-

MATERIAL: SEE TABLE
FINISH: SEE TABLE

DWN R. VESTAL 19JUN2012
CHK D. STRAUSSER 19JUN2012
APVD D. STRAUSSER 19JUN2012
PRODUCT SPEC 108-1329
APPLICATION SPEC 114-16016
WEIGHT -

TE Connectivity

NAME CONTACT, AMPSEAL
-
-

SIZE A2 | CAGE CODE 00779 | DRAWING NO C-770520 | RESTRICTED TO

CUSTOMER DRAWING | SCALE 10:1 | SHEET 1 OF 1 | REV E2

1471-9 (3/13)